DL

DL-B

Slim, compact gauges

- Magnetic principle
- Excellent resistance to workshop conditions (DL310B: IP64). Resistant to dust and vibrations.
- Compact size ideal for designing into machines.
- A/B phase output by open collector
- Measuring range: 10 mm / 0.39" and 30 mm / 1.18"

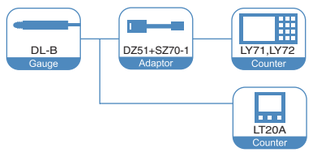

Digital Gauge

Dimensions

DL310B

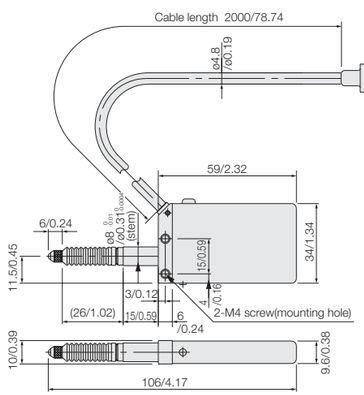

DL330B

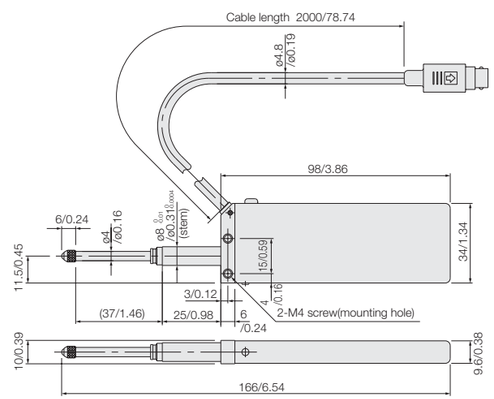

Unit : mm/inch

Specifications

Model	DL310B	DL330B
Measuring range	10 mm/ 0.39"	30 mm/ 1.18"
Resolution	10 µm	
Accuracy (at 20 ˚C /68 ˚F)	10 µm	
Measuring force	1.5 N or less	
Output signal	A/B phase by NPN open collector (12 VDC, 10 mA or less)	
Maximum response speed*1	120 m/ min	
Protective design grade	Equivalent to IP 64	—
Mounting stem diameter	ø 8 $^{0}_{-0.01}$ mm / ø 0.31" $^{0}_{-0.0004"}$	
Operating temperature	0 ˚C to 50 ˚C / 32 ˚F to 122 ˚F	
Storage temperature	-10 ˚C to 60 ˚C / 14 ˚F to 140 ˚F	
Power supply	5 VDC ± 5%	
Power consumption	0.2 W	
Cable length	2 m / 6.56'*2	
Feeler	Feeler tipped with 3 mm dia. carbide ball with M2.5 x 0.45 screw on fitting end (DZ123)	
Mass (excl. cable unit)	60 g / 2.12 oz	90 g / 3.17 oz
Vacuum pressure for Air lifter	6.0 x 10^4 to 7.5 x 10^4 Pa	—

*1: Max. response speed of the electrical circuit.
*2: Please consult our sales for more than 2m.
*Consult us when using DL310B/ 330B with the probe facing upward.

Accessories

DZ51 (Relay adapter) For connections of DG-B, DL-BR, DL-B and DT12/32N/P* to LG, LH and LY displays

*To connect the DT12/32N/P, use the DZ51 in combination with the MT10 detector.

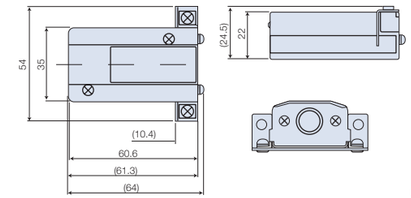

Unit : mm

DZ-811 Bushing (for mounting a U60A or a DE30BR to a DZ-501 stand)

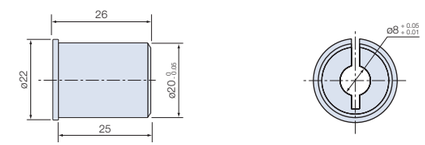

Unit : mm

DZ173 Air release (for DE12BR/30BR, U Series)

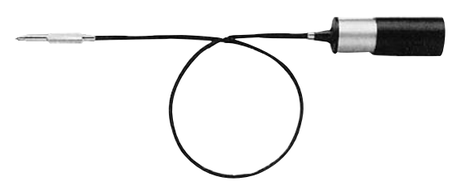

DZ175-010 Air Lifter (for DL10BR) -030 (for DL30BR) -060 (for DL60BR)

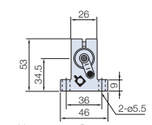

Measuring unit	A	B	C
DL10BR	28.5	102	1
DL30BR	48.5	102	1
DL60BR	83	161	5.5

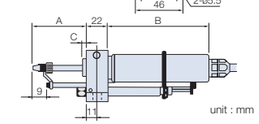

unit : mm

DZ301 Bellows set (for DL330B, DE30BR)

Bellows

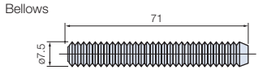

Extension spindle

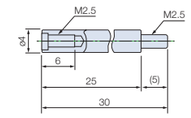

•With the extension spindle attached, the spindle is extended by 25 mm and the measuring force increases by about 0.3 N.

Unit : mm

DZ-191 Coupling

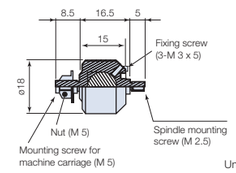

Unit : mm

SZ70-1 Adapter

SZ70-1 is required for connecting the following scale units and counters:
Gauge unit: DE-BR Series, DG-B Series
Counter: LY71 and LY72
* Adapter DZ51 is also required

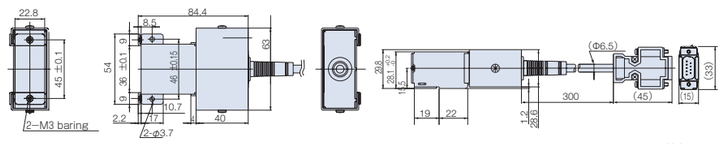

Unit : mm

*Please refer to p54 for the details of the screw.